Introduction

- A plate girder is an I-beam built up from plates using bolting or welding.


Shear Studs
Top Flange
Web stiffener
Flange to web
fillet weld
Web
Bottom Flange

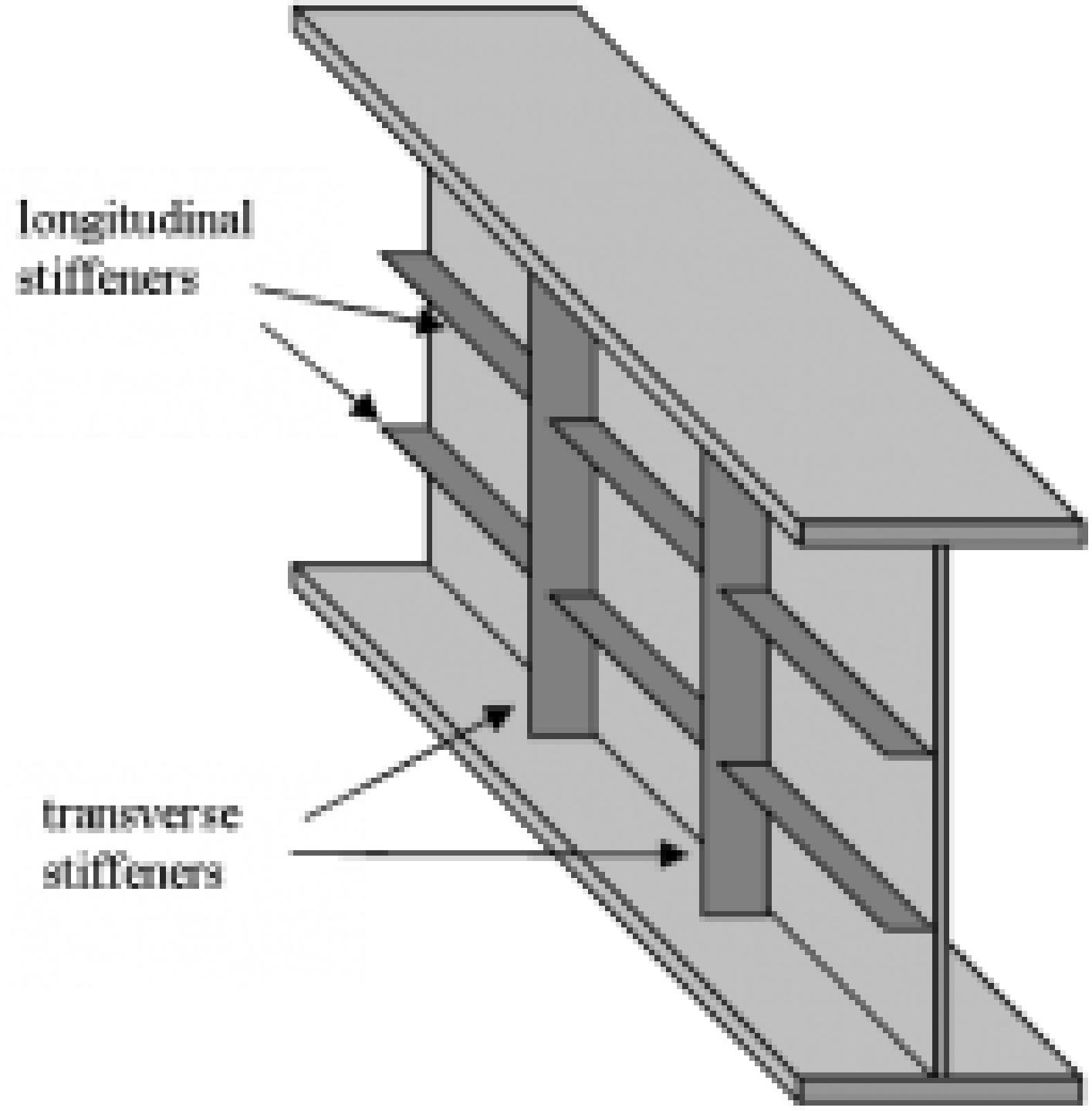
longitudinal
stiffeners
transverse
stiffeners

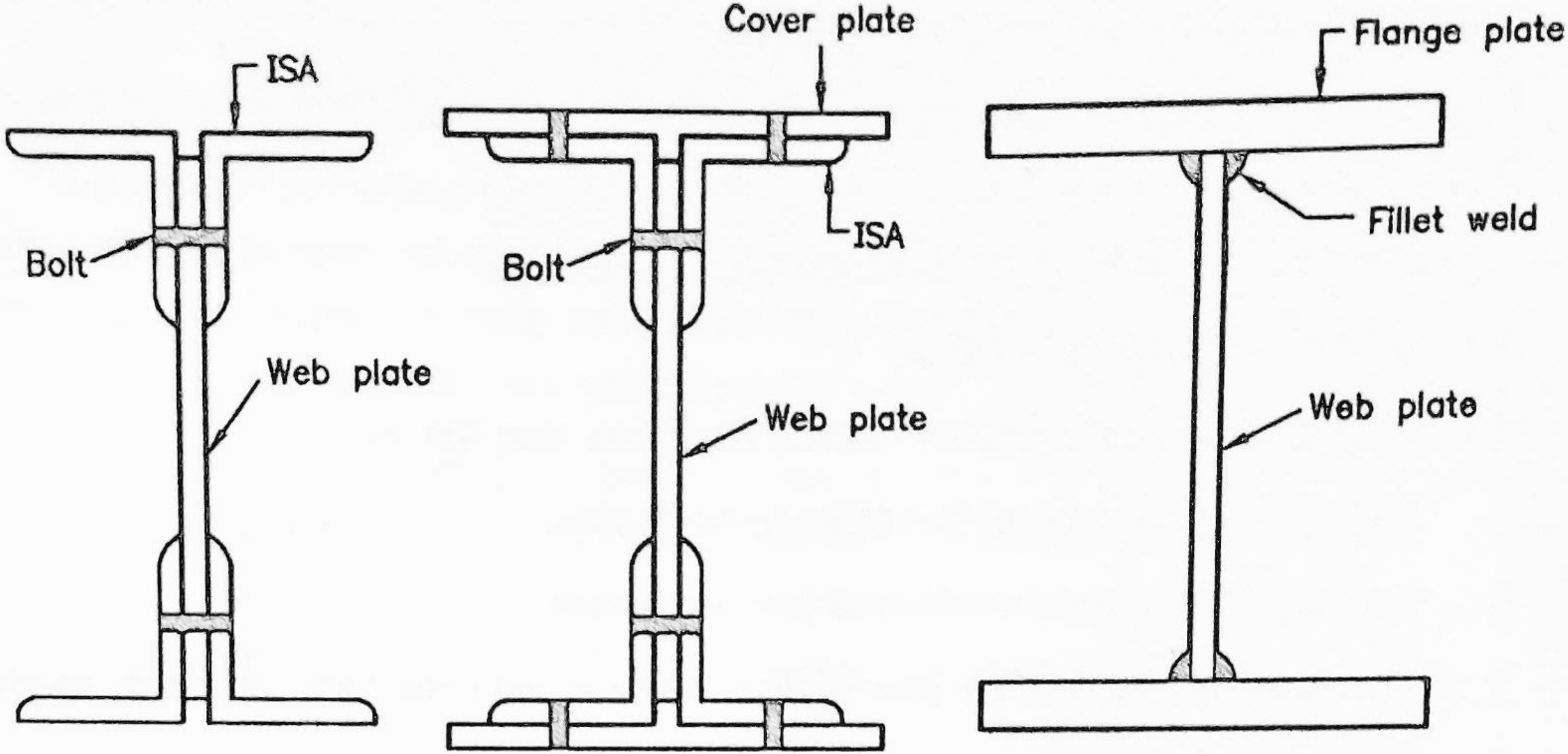

(a) bolted without cover plates

(b) bolted with cover plates

(c) welded girder

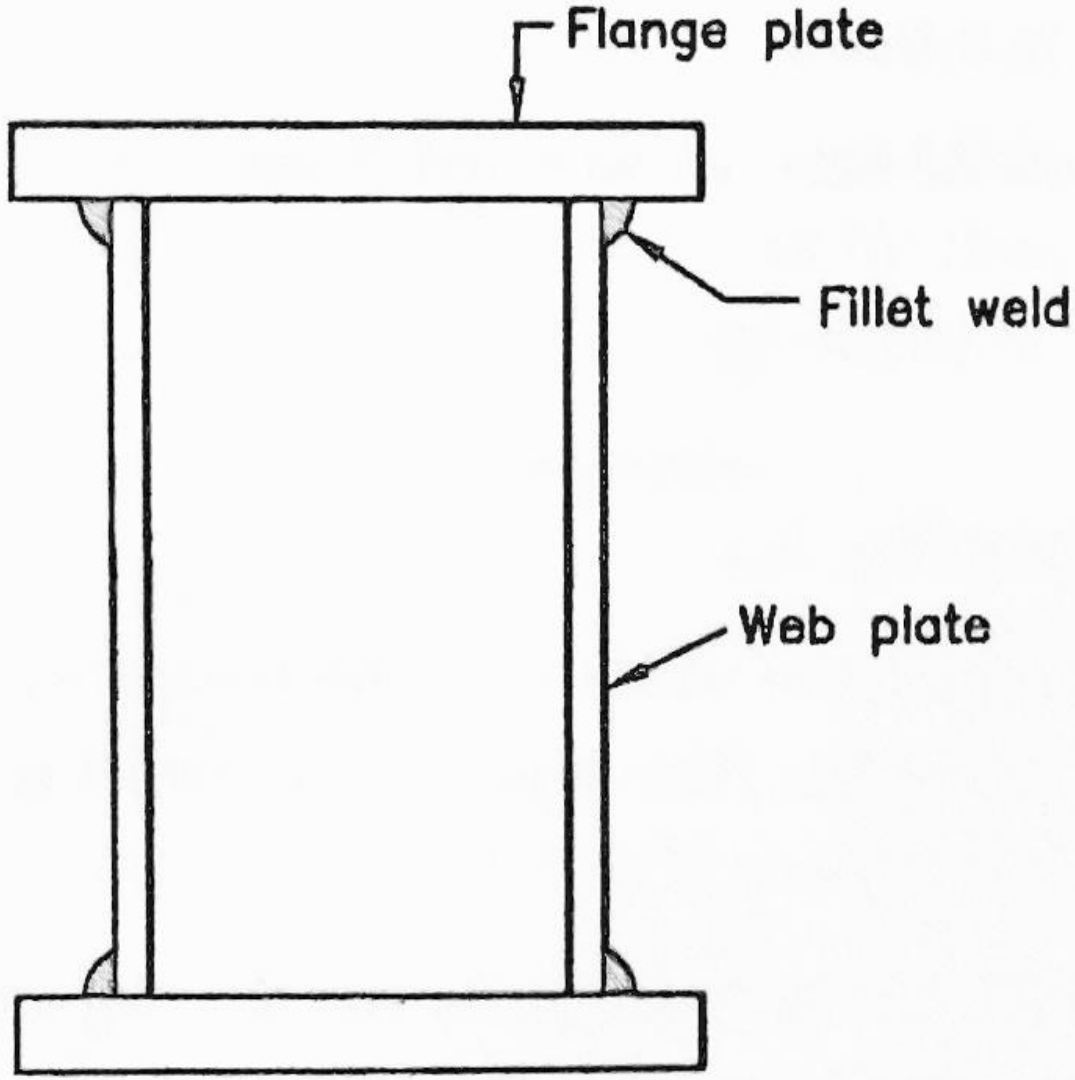

(d) box girder

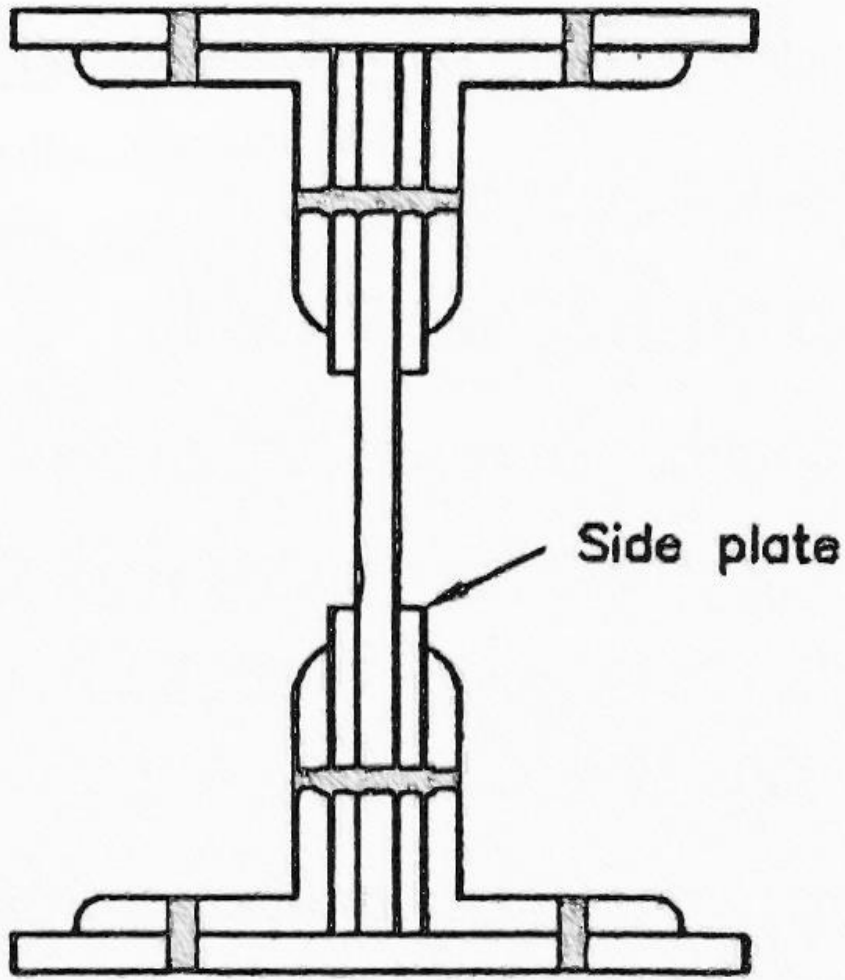

(e) girder with side plates

Step-1 : Loading

Assume self weight of girder

$$= \frac{\text{Total factored load}}{200} \text{ kN/m}$$

total u.d.*l*.,

w = u.d.*l*. (D.L. + L.L.) + Self weight of girder

Step - 2 : S.F. and B.M. calculations

Step - 3 : Section Selection

determine the optimum depth of girder by relation,

$$d = \left[\frac{M\,k}{f_y}\right]^{0.33}$$

$$k = \frac{d}{t_w}$$

For $\frac{d}{t_w} \leq 67\,\varepsilon$ ....no end stiffner & intermediate transverse stiffners are required.

For $\frac{d}{t_w} \simeq 100$ .... intermediate transverse stiffners are not required. Only end stiffners are required.

Area of flange required,

$$A_f = \frac{M}{f_y \times d} \cdot \gamma_{mo}$$

For flange to be plastic, for welded section

$$\text{take } \frac{b}{t_f} = 8.4\,\varepsilon \text{ (Table - 2, code P.18)}$$

Step - 4 : Check for minimum web thickness requirements

As per IS : 800 - 2007, cl. 8.6.1.1, P. 63

Step - 5 : Check for moment capacity

$$M_d = \frac{\beta_b \cdot Z_p \cdot f_y}{\gamma_{mo}}$$

IS : 800 - 2007

β_b = 1 for plastic and semicompact sections

cl. 8.2.1.2, P. 53

Z_p = plastic section modulus of flanges only

= B.M. of flanges at equal area axis (z-z axis)

M_d should be greater than factored moment M.

Step - 6 : Check for shear capacity of web

$$V_d = \frac{A_v \cdot f_{yw}}{\sqrt{3} \cdot \gamma_{mo}}$$

IS : 800 - 2007

$0.6\ V_d \geq V$ must be satisfied.

cl. 8.4.1, P. 59

Step - 7 : Check for shear buckling of web using simple post - critical method

(cl. 8.4.2.2 (a))

$V_n = V_{cr}$

$V_{cr} = A_v \cdot \tau_b$

I_f, $V_{cr} > V$ .... Intermediate transverse stiffners are not required

I_f, $V_{cr} < V$ .... Intermediate transverse stiffners are required to improve the buckling strength of slender web.

Step - 8 : Check for Anchor forces in the end panel : (cl. 8.5.3)

This check is required when intermediate transverse stiffners are provided.

Step - 9 : Design of end bearing stiffner

Step - 10 : Design of intermediate transverse stiffners, if required.

Step - 11 : Design of connection between web plate and flange

Step - 12 : Design of connection between stiffners and web.